ISO9001 - 2008 Certified

GECN Remote Power Supply Series Product

# User's Manual
# Of
# Remote Unit of Indoor DC Remote Power Supply

## With Models
## TELSUN-VI-YD (H～L/Z 2000E)
## TELSUN-VI-YD (H～L/Z4000E)

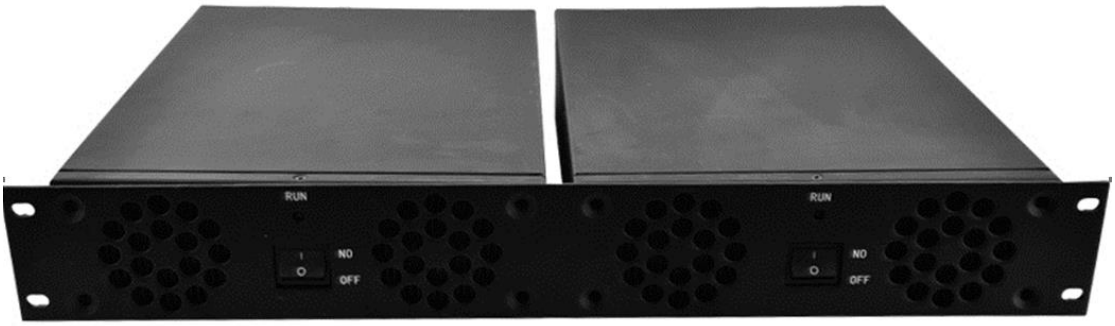


Version A00

Content

Foreword

I. direct current remote power supply remote unit
1 Overview
2 Applications
3 Product options

II. Technical parameters

III. Direct current remote power supply remote unit installation
1 Open box for checking
2 Installation preparations
3 Mechanical installations
4 Electrical connection

VI. Trial and operation of direct current remote power supply remote unit
The common trouble shooting

V. Remote unit maintenance of direct current remote power supply
1. Maintenance term
2. Maintenance scope
3. Maintenance security notes

VI. Packing detailed list

Foreword

Thanks for using our TELSUN-Ⅵ model DC remote power supply, please read this manual carefully before use.

Warning

Before installing and adjusting the DC remote power supply, please read following safe rule and warning, and equipment taped caution marks, ensuring the caution mark is placed in outstanding parts and replacing damaged or worn marking. If you neglect these safety indication, it may cause personnel's death or injury or cause the damage to direct current remote power supply or its connected equipment.

Declaration

Without written permission, it is not allowed to copy or dissemination or use the manual and its related contents.

Safe information

Warning

If don't obey the relevant requirements, or do not adopt corresponding measures, it result in slight or serious human body injury or equipment

damage.

The direct current remote power supply electric circuit takes dangerous high voltage, forbid touch the circuit under the situation with power on, the line connection work has to be carried on under the situation of the power cut, equipment maintenance can only be taken charged by technicians of our company.

DC remote power supply installation, adjustment, operation, maintenance has to be operated and implemented by certified personnel. The related personnel is with safety operation certificate of the national approval, the personnel has to also acquaint with work for this equipment, i.e., the equipment installation, adjustment, operation, the maintenance step and requirements, and various possible urgent circumstances.

A. The direct current remote power supply can only be used application fields specified in this manual.
B. ⏚ is used for grounding of DC remote power supply. To ensure security, DC remote power supply case must be with grounding, whose reference voltage is with same value of the earth voltage.
C. When the DC remote power supply is installed or checked, please cut off power supply first, any mechanical or electrical operation all be done after equipment power cut.

I. Remote unit of direct current remote power supply

1. Overview

Direct current remote power supply remote unit (also called the power supply long haul) is one of the series products of the telecom equipment remote power supply, it is DC/DC or AC/DC big power telecom power supply equipment, it is a new power supply product of high efficiency, safety, no access interference developed and manufactured as a solution for various telecom equipment power supply.

TELSUN-VI model DC remote power supply gives a solution for smooth communication barrier due to dispersed telecom equipment, main power access difficulty, main power failure, power off or unsteadiness, human factor power failure, etc.. It facilitates more convenient installation of telecom equipment, site choosing, more reliable telecom equipment operation, reducing the maintenance workload of the telecom equipment to the lowest. Compared with the traditional UPS equipment, it features higher safety, no limit to storage battery capacity, or service life, recharge or discharge, or power supply time, no need traditional UPS periodic checking or tedious work for recharging or discharging to the battery, it relieves bad environment affectation, thus to lower the maintenance cost significantly, improving to the Max. the reliability of equipment for communication.

TELSUN-VI model DC remote power supply is a kind of power supply

independent remote supply system, it is constituted by TYJ model office end and TYY model remote end. It uses stable power supply DC－48V or AC220V from the signal source computer room with processing such as boosting, isolation, protection via office end TYJ, enabling it to become suspending DC high voltage, which supplies power to remote unit TYY (by selecting remote end TYY of different output) through photo-electric cable, telecom cable or electric power cable for isolation and protection processing, then the power for TYY is access to the telecom equipment in the remote places for telecom equipment power supply.

2 Applications

TELSUN-VI model DC remote power supply can be applied in: remote power supply to telecom equipment such as digital/analogue fiber optic repeater, backbone amplifier, radio frequency remote haul (GRU and RRU), marginal station, micro cellular, small macro base station, EPON, city security and defense system, Wireless LAN, wireless AP, PHS base station, ADSL, etc..

3 Product selection

You can order appropriate DC remote power supply or consult us based on your demands.

II. Technical specifications

TELSUN-VI-YD (the H-L/Z2000E)/TELSUN-VI-YD (H-L/Z4000E)-00 can be compatible with AC/DC input, it is with perfect protection function, which can be automatically insulated from the input circuit while breakdown. When any protective circumstance occurs, use a dry contact to output the breakdown alarm signal (dry contact open circuit is normal, the short circuit is for alarm, it is short-circuit status when there is no power input). All protection functions recover automatically after breakdown removed.

TELSUN-VI-YD (H-L/Z2000E)/TELSUN-VI-YD (H-L/Z4000 E) is with parallel units capacity.

| Model | **TELSUN-VI-YD** | **TELSUN-VI-YD (H-L/Z4000E)** |
|---|---|---|
| Input | | |
| Input voltage | DC 220V～380V or AC 170V～265V(45Hz～65Hz) | |
| Conversion efficiency | ≥ 92%(300VDC) | |
| Output | | |
| Output voltage | 52.5-54.5VDC | |
| Output current | 37.0A | 74.0A |
| Output power | 2000 W | 4000 W |
| Protection | | |
| Input overvoltage protection | DC 395V～415V or AC 280V～310V(in AC) | |

| | | |
|---|---|---|
| Input under-voltage protection | DC 190V～210V or AC 135V～149V(in AC) | |
| Input Max. current | 220VDC≤8A, | 220VDC≤16A, 170VAC≤30A |
| Input overvoltage protection | 1.05～1.15*rated output voltage | |
| Output flow limit protection | 1.05～1.25*rated output current | |
| Output short-circuit protection | Available | |
| Overheat protection | Available | |
| Breakdown insulation | When the remote unit inner part occurs input overcurrent or short circuit, insulate the remote unit and the input power supply, avoid affecting other remote parallel units | |
| Breakdown alarm | The dry contacts are closed when there is no power input or in breakdown, the dry contacts are open when there is normal output | |
| status indicate | Green indicator shows normal operation, otherwise red | |
| Anti-lightning grade | input end: 20 KA(8/20us) output end: 10 KA(8/20us) | |
| Environment condition | | |
| Working temperature | －20℃～55℃ | |
| Storage temperature | －40℃～70℃ | |
| Relative humidity | ＜ 95% (non-condensing) | |
| Elevation height | Below 4000 m | |
| Cooling way | Intelligent air cooling | |
| Protection grade | IP30 | |

Notes: TELSUN-VI-YD (H-L/Z2000E)/TELSUN-VI-YD (H-L/Z4000E) is not configured with dry contact alarm output line, if demand, the user needs to specify when order.

## III. Installation Remote Unit of DC Remote Power Supply

1. Open the box for checking

1.1 Open the box

Open the packing box and check the remote unit TYY to see whether there is damage or deformation in transportation, if yes, please contact us immediately

1.2 Confirm detailed packing list

Based on detailed packing list, please check the remote unit TYY and its accessories to confirm whether it is the right model purchased, if there is any difference or imperfection, please contact our company for timely replacement or supply.

1.3 Storage
If temporarily you do not install or use, please provide storage location according to the following requirements:

A. storage temperature: -40 ℃ - +70 ℃

B. storage relative humidity: <95% (non-condensed)
C. cannot store it into the environment with causticity air or with damage to DC remote power supply.

2 Installation preparations
2.1 Installation after a long time storage
When you install the remote unit TYY after long time storage, e.g., it is over 2 years or the storage environment could not reach the related standards, you have to re- examine it, please notice the storage time is from the date of leaving factory, but not from the goods delivery time.

2.2 Operation environment confirmation
Before the remote unit TYY installation, PLS confirm the operation environment of the installation site as per the following requirements.

A. Temperature: -20 ℃-+55℃

B. relative humidity: <95% (non-condensed)
C. elevation height: below 4000m
D. air pollution: Do not allow to install remote unit TYY in the environment with the causticity air.
E. pounding and vibration: Do not allow the remote unit TYY to be dropped or suffer from a sudden impact;
Do not allow to install the remote unit TYY at the place with possible frequent vibration.

2.3 Installation confirmation
Before installation the remote unit TYY, please confirm installation as per the following requirements:
A. Whether the accessory office end unit TYJ meets the requirements for remote power supply;
B. Whether the laid electric cable meets the requirements;
C. Whether the rated voltage and power of the driven telecom equipment is compliant to the requirements.

3 Mechanical installation
3.1 Model TELSUN-VI-YD (H-L/Z4000E)/TELSUN-VI-YD (H-L/Z4000E) dimensions

| Size | TELSUN-VI-YD (H-L/Z4000E) | TELSUN-VI-YD (H-L/Z4000E) |
|---|---|---|
| L*W*H (mm * mm * mm) | 482*302*67mm | |

3.2 TELSUN-VI-YD (H-L/Z2000E)/TELSUN-VI-YD (H-L/Z4000E) outlook
A. Model TELSUN-VI-YD (H-L/Z2000E) view

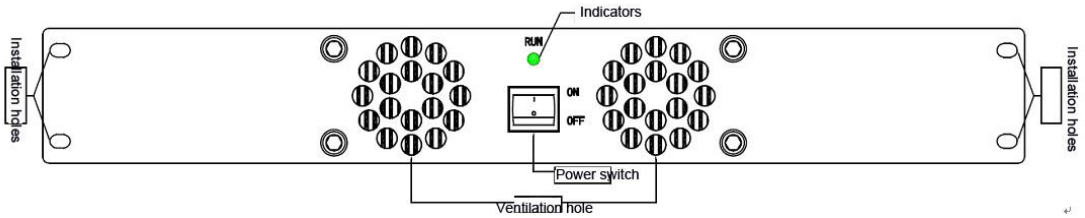


Figure 1 Front View

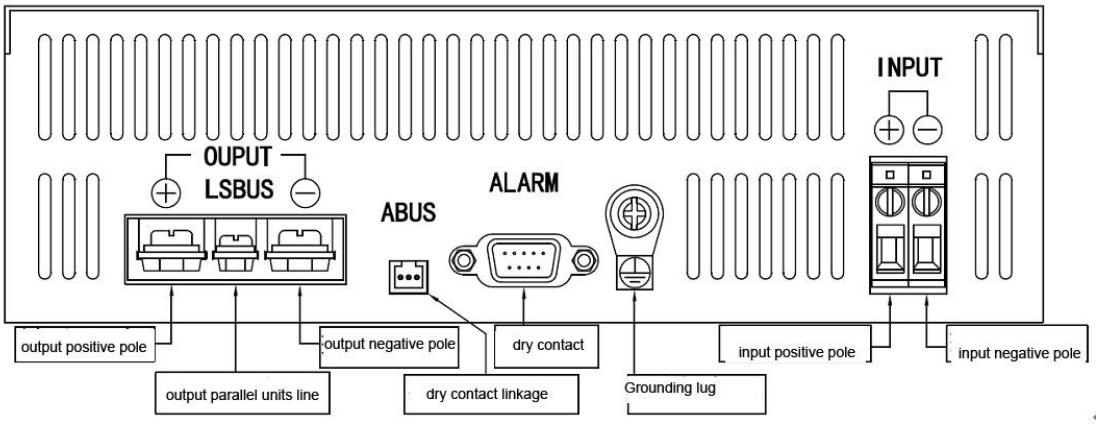


Figure 2 Rear Wiring

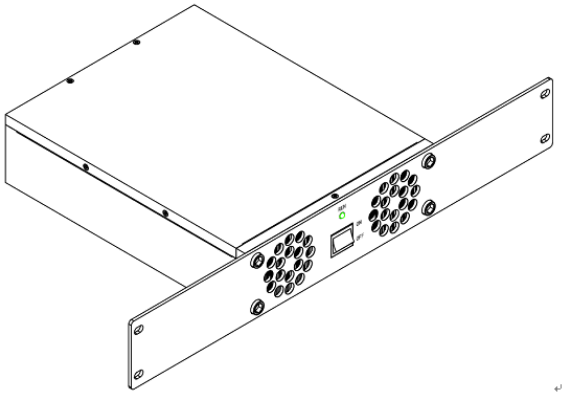

Figure 3 Whole Set

B. Model TELSUN-VI-YD (H-L/Z4000E) view

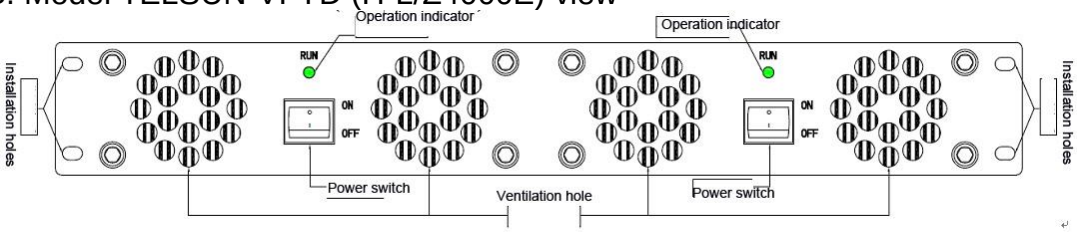


Figure 4 Front View

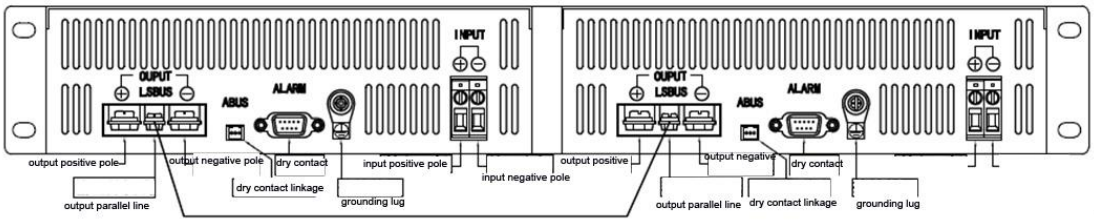


Figure 5 Back View

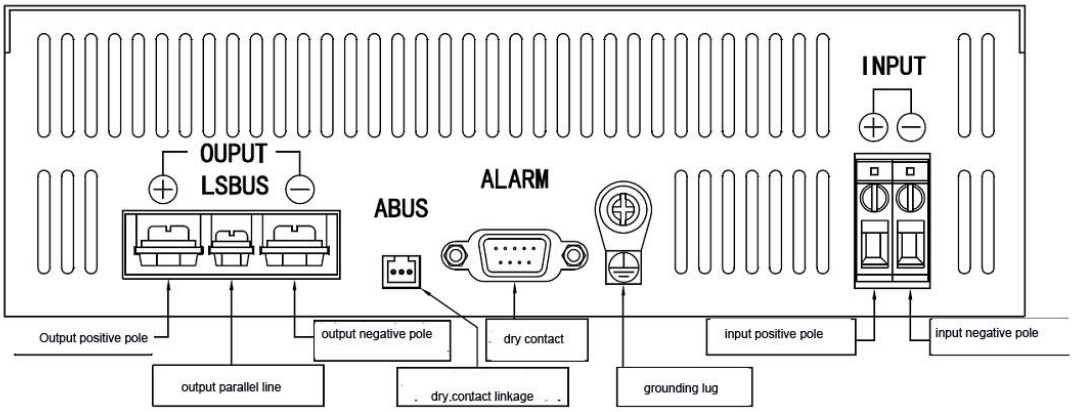


Figure 6 Rear Wiring

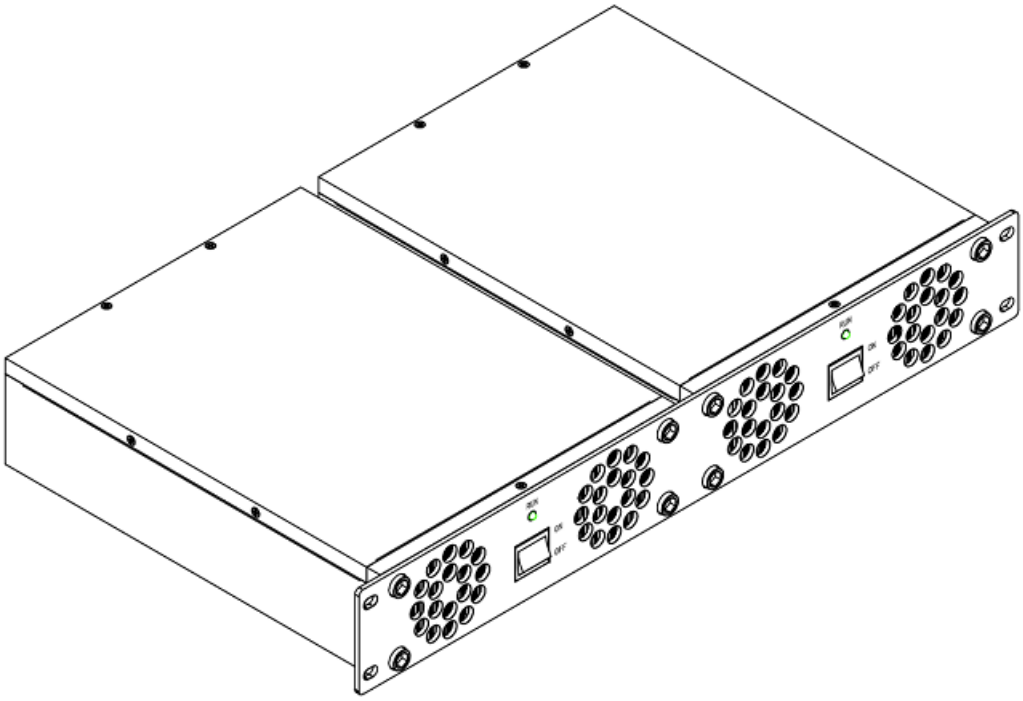

Figure 7 Whole Set

a. INPUT: Input electric cable port
b. OUTPUT: Output electric cable port
c. LSBUS: Parallel units electric cable port
d. ABUS: dry contact linkage electric cable port
e. ALARM: dry contact electric cable port
f. ⏚: remote unit safe grounding

3.3 Installation of TELSUN-VI-YD (H-L/Z2000E)/TELSUN-VI-YD (H-L/Z4000E)
A. Select installation position: Choose the position to install the remote unit TYY by the side of the telecom equipment cabinet or the telecom equipment itself according to the size of the remote unit TYY;

B. At the selected installation position, confirm whether to install in the equipment cabinet according to the circumstance. Use the provided accessories to fix well all accessories after adopting suitable fixing way;

IV. Electrical connection
4.1 DC remote power supply wiring
4.1.1 DCs remote power supply single machine connection Figure

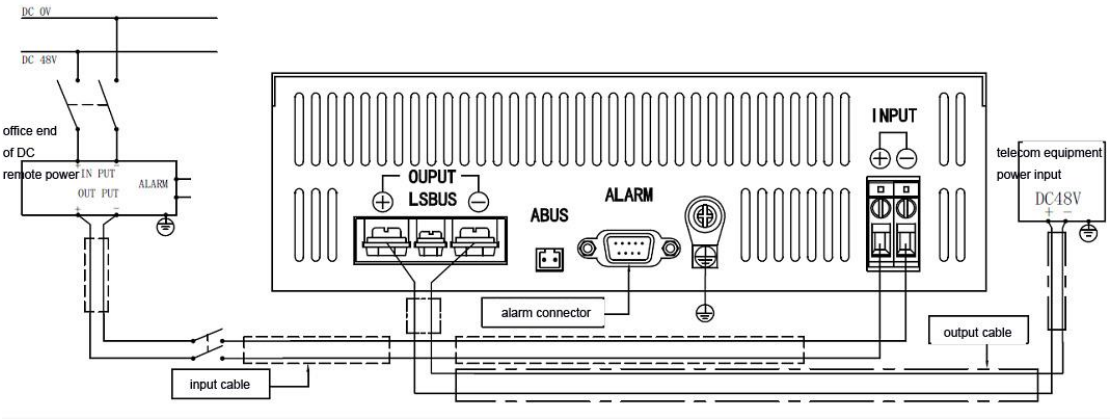


Figure 8 Single Unit Wiring Diagram

4.1.2 DC remote power supply parallel units wiring

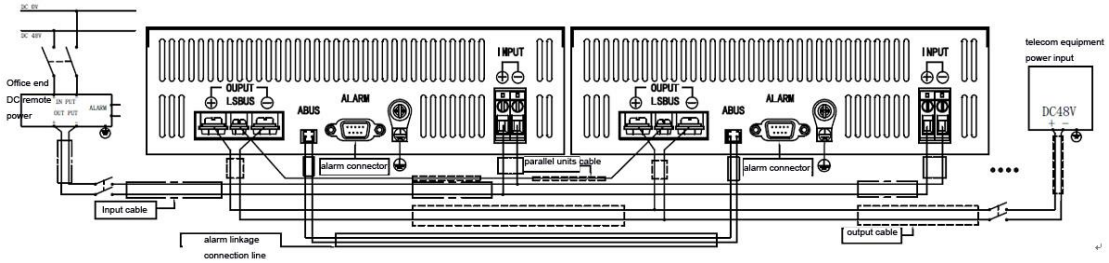


Figure 8 Multi Parallel Units Wiring

4.2 DC remote power supply wiring regulation
Warning

a. DC remote power supply have to be grounded reliably, if there is no reliable grounding, the device may cause the potential danger of the human body injury, or cannot prevent from thunder or lightning affect effectively. Grounding resistance shall be less than 5 Ω.
b. When the DC remote power supply is wired or change wiring, you have to switch off the power supply; Before power off, please make sure the access power supply voltage is without any error, not allowing connection the DC remote power supply to any other power supplies.
c. During installation, you have to check whether the designed solution for remote power supply matches the related remote power supply requirements, such as the related contents such as power taking method,

power capacity, voltage grade, power supply distance and the power supply cable diameter, etc., ensuring to meet that requirements for remote power supply.

**Notice:**

During installation, if the electric cable or electric wire core line have no different color to distinguish them, you must adopt other way for recognition and analysis, such as the adding line No. for distinction; Before switching on the machine, you have to carefully check the electric cable connection, after confirming there is no error then power on it.

Notice

During installation of TELSUN-VI-YD (H-L/Z4000E) model power supply, each line leading wire of input or output terminal contact shall be connected to the chief switch then to the equipment using it, forbidding the wire leading after parallel connection of 2 units input or output terminal contacts.

**Notice**

During installation, if there is the case with cable contacts or one set of DC remote power supply driving multi units, please pay attention processing to the contacts (such as water-resistance, insulation, outdoors aging, decay, etc.), the cable contact shall be firm and reliable, with good insulation, good water-resistance.

4.3 TELSUN-VI-YD (H-L/Z2000E)/TELSUN-VI-YD (H-L/Z4000E) Wiring

A. Confirm the matching office end unit TYJ meeting the local requirements for telecom equipment remote power supply;

B. Confirm the laid power supply cable meeting local requirements for telecom equipment remote power supply;

1) Select the cable with appropriate cross-sectional area, such as photoelectric composite cable, power cable, twisted pair wire, etc.;
2) Use digital multi-meter to measure the ring resistance of the cable, confirm it is without much difference to the theoretical calculation values.

D. Line connection between remote unit TYY and the telecom equipment

1) Access remote unit output cable-red line into the input positive pole of the telecom equipment;
2) Access remote unit output cable-blue line into the input negative pole of the telecom equipment.

D. Connect the power cable between office end unit TYJ and the remote unit TYY.

1) Connect one core of the power cable located in the office end into the office end output positive pole- OUTPUT: +Line connection end;

Connect the same core located in the remote end into the remote end input cable- with red line connection;

2)Connect another core of the power cable located in the office end into the office end output negative pole- OUTPUT: -Line connection end;

Connect the same core located in the remote end into the remote end input cable- with blue line connection.

E. Connect cable between the remote unit TYY and the ground

Connect the remote unit with safe grounding and the telecom equipment with safe grounding, confirm the safe grounding is reliable.

F Connect remote unit parallel units cable (no demand for this cable if there is no parallel units or no dry contact for alarm)
Connect one parallel remote unit's LSBUS port leading power cable to the same core line of another parallel remote unit LSBUS port electric cable; Blue-blue.

VI. Trial and operation of remote end of the DC remote power supply

**Warning**

Wait for 5 minutes after the DC remote power supply power-off, ensure DC remote power supply discharges completely, then you can start installation, change line, support or maintenance, etc. .

**Notice**

Before power on, you have to carefully check the connection of the electric cable and equipment, it shall be correct, firm and reliable, with good contact, good insulation, standard and good wiring, etc., and confirm there is not any error and then you can send the power.

1 Trial

1.1 After line connection completing, check whether the input, output electric cable connection has short circuit, or open circuit case, the connection of input, output terminal contact has correct and firm connection, whether the polarity is correct, whether the insurance tube is intact;

1.2 After confirming there is no error for the wiring, switch on the telecom equipment linking with the remote unit TYY;

1.3 After the office end unit TYJ sending power, check whether the output indicator is normal, is yes, measure the output voltage of the remote unit TYY; TELSUN-VI-YD (H-L/Z2000E)/TELSUN-VI-YD (H-L/Z4000E) is DC54 V;

1.4 The remote unit output voltage is normal, check whether the telecom equipment indicator is normal, if yes, measure whether the telecom equipment power supply voltage is normal;

1.5 After normal power supply operations for over 30 minutes, if the telecom equipment power supply indicator runs normally, it proves the voltage is normal, the trial is a success.

2 Operation

After the DC remote power supply trial success, it can be put into the operation.

3 Common trouble-shooting

3.1 The remote unit TYY there is no output:

Check whether the remote unit input is normal.

A. If there is no input voltage, check whether the office end unit is normal or the circuit is well connected;

B. If there is an input, the voltage is within DC220 V-380 V, replace with one good remote unit.

If there is input, the voltage is lower than DC220 V, check whether the remote power supply parameters such as power, voltage grade, cable, power supply

distance is compliant to requirements.
3.2 The remote unit TYY has output, output voltage is normal, telecom equipment has no indication:
Check whether the telecom equipment input end has voltage, and the whether the voltage is within the required scope?
A. If the there is no input, check whether the connection line between the remote unit and telecom equipment is normal;
B. If there is input, the voltage is within DC43 V-DC57 V, then check whether the polarity of the connection line is correct; If the connect line has right polarity, then it is the internal power problem of the telecom equipment;
C. If there is an input, the output voltage is lower than DC43 V, check whether the connection line is very long between the remote unit and the telecom equipment (DC54 V power supply shall not have connection line more than 30 meters), then reduce the connection distance or thicken the connection line.
3.3 When the remote unit TYY has output, and the output voltage deviates from normal voltage greatly, then you need to replace remote unit.
3.4 Remote unit TYY can be damaged by the thunder-storm weather, please check whether the grounding line is connected, whether it firm or reliable, whether it meets the related standard; If it is normal, then check whether the grounding impedance meets the related requirements.

## V. Notice for Safe Maintenance

a. No need for maintenance if this power system is under normal operation environment with no dust or condensing. Under all circumstances, such as the operation, clearing or maintenance, please must obey related international security standards;
b. Under all circumstances, please absolutely do not disassemble the cover or touch internal spare parts. For the sake of safety, please do not have inner part maintenance or spare parts replacement by yourself.

## VI. Packing List

| No. | Item | Model/specifications | Quantity | Remarks |
|---|---|---|---|---|
| 1 | power supply remote end | TELSUN-VI-YD (H-L/Z4000E)<br>TELSUN-VI-YD (H-L/Z4000E) | 1 set | |
| 2 | Front panel | Front panel | 2000W(2) pcs<br>4000W(1) pc | |
| 3 | Internal hex-screw | M5*10 black | 2000W(4) pcs<br>3000W(8) pcs | |
| 4 | User's manual | volume | 1 | |
| 5 | Locking screw nut buckle | M6 | 4 pcs | |
| 6 | QC certificate | pc | 1 pc | |
| 7 | Locking screw | M6*12mm | 4 pc | |
| 8 | Line for parallel units | Power cable RV 1*0.5MM ㎡ /blue multi-strand | 1 pc | Accessory for 4000W model |
| 9 | Line lug | 0 model line lug 4-6 (dedicated to safe grounding) | 2000W(1) pc<br>4000W(2) pcs | |
| 10 | Copper screw | Screw M4*12mm (dedicated to safe grounding) | 2000W(1) pc<br>4000W(2) pcs | |

| | | | |
|---|---|---|---|
| 11 | Elastic medium | Elastic medium M4<br>(dedicated to safe grounding) | 2000W(1) pc<br>4000W(2) pcs |
| 12 | Flat mat | Heisuke M4<br>(dedicated to safe grounding) | 2000W(1) pc<br>4000W(2) pcs |

Inspected by:

Inspection date: